MATRIX

A **matrix** is simply a set of numbers arranged in a rectangular table.

$$\begin{bmatrix} 0.3 & 1 & -5 \\ 0 & -0.2 & 16 \end{bmatrix}, \quad \begin{bmatrix} a_{11} & a_{12} & a_{13} \\ a_{21} & a_{22} & a_{23} \\ a_{31} & a_{32} & a_{33} \end{bmatrix},$$

$$\begin{bmatrix} e^{-x} & 2x^2 \\ e^{6x} & 4x \end{bmatrix}, \quad \begin{bmatrix} a_1 & a_2 & a_3 \end{bmatrix}, \quad \begin{bmatrix} 4 \\ \frac{1}{2} \end{bmatrix}$$

General Concepts and Notations

Let us formalize what we just have discussed. We shall denote matrices by capital boldface letters $\mathbf{A}$, $\mathbf{B}$, $\mathbf{C}, \cdots$, or by writing the general entry in brackets; thus $\mathbf{A} = [a_{jk}]$, and so on. By an $\boldsymbol{m \times n}$ **matrix** (read *m by n matrix*) we mean a matrix with m rows and n columns—rows always come first! $m \times n$ is called the **size** of the matrix. Thus an $m \times n$ matrix is of the form

$$\mathbf{A} = [a_{jk}] = \begin{bmatrix} a_{11} & a_{12} & \cdots & a_{1n} \\ a_{21} & a_{22} & \cdots & a_{2n} \\ \cdot & \cdot & \cdots & \cdot \\ a_{m1} & a_{m2} & \cdots & a_{mn} \end{bmatrix}. \tag{2}$$

Vectors

A **vector** is a matrix with only one row or column. Its entries are called the **components** of the vector. We shall denote vectors by ***lowercase*** boldface letters $\mathbf{a}$, $\mathbf{b}, \cdots$ or by its general component in brackets, $\mathbf{a} = [a_j]$, and so on. Our special vectors in (1) suggest that a (general) **row vector** is of the form

$$\mathbf{a} = [a_1 \quad a_2 \quad \cdots \quad a_n]. \qquad \text{For instance,} \qquad \mathbf{a} = [-2 \quad 5 \quad 0.8 \quad 0 \quad 1].$$

A **column vector** is of the form

$$\mathbf{b} = \begin{bmatrix} b_1 \\ b_2 \\ \vdots \\ b_m \end{bmatrix}. \qquad \text{For instance,} \qquad \mathbf{b} = \begin{bmatrix} 4 \\ 0 \\ -7 \end{bmatrix}.$$

Equality of Matrices

Equality of Matrices

Two matrices $\mathbf{A} = [a_{jk}]$ and $\mathbf{B} = [b_{jk}]$ are **equal**, written $\mathbf{A} = \mathbf{B}$, if and only if they have the same size and the corresponding entries are equal, that is, $a_{11} = b_{11}$, $a_{12} = b_{12}$, and so on. Matrices that are not equal are called **different**. Thus, matrices of different sizes are always different.

Equality of Matrices

Let

$$\mathbf{A} = \begin{bmatrix} a_{11} & a_{12} \\ a_{21} & a_{22} \end{bmatrix} \quad \text{and} \quad \mathbf{B} = \begin{bmatrix} 4 & 0 \\ 3 & -1 \end{bmatrix}.$$

Then

$$\mathbf{A} = \mathbf{B} \quad \text{if and only if} \quad \begin{aligned} a_{11} &= 4, \quad a_{12} = 0, \\ a_{21} &= 3, \quad a_{22} = -1. \end{aligned}$$

Addition of Matrices

Addition of Matrices

The **sum** of two matrices $\mathbf{A} = [a_{jk}]$ and $\mathbf{B} = [b_{jk}]$ ***of the same size*** is written $\mathbf{A} + \mathbf{B}$ and has the entries $a_{jk} + b_{jk}$ obtained by adding the corresponding entries of $\mathbf{A}$ and $\mathbf{B}$. Matrices of different sizes cannot be added.

As a special case, the **sum** $\mathbf{a} + \mathbf{b}$ of two row vectors or two column vectors, which must have the same number of components, is obtained by adding the corresponding components.

Addition of Matrices and Vectors

If $\mathbf{A} = \begin{bmatrix} -4 & 6 & 3 \\ 0 & 1 & 2 \end{bmatrix}$ and $\mathbf{B} = \begin{bmatrix} 5 & -1 & 0 \\ 3 & 1 & 0 \end{bmatrix}$, then $\mathbf{A} + \mathbf{B} = \begin{bmatrix} 1 & 5 & 3 \\ 3 & 2 & 2 \end{bmatrix}$.

Multiplication by a Number

Scalar Multiplication (Multiplication by a Number)

The **product** of any $m \times n$ matrix $\mathbf{A} = [a_{jk}]$ and any **scalar** c (number c) is written $c\mathbf{A}$ and is the $m \times n$ matrix $c\mathbf{A} = [ca_{jk}]$ obtained by multiplying each entry of $\mathbf{A}$ by c.

Here $(-1)\mathbf{A}$ is simply written $-\mathbf{A}$ and is called the **negative** of $\mathbf{A}$. Similarly, $(-k)\mathbf{A}$ is written $-k\mathbf{A}$. Also, $\mathbf{A} + (-\mathbf{B})$ is written $\mathbf{A} - \mathbf{B}$ and is called the **difference** of $\mathbf{A}$ and $\mathbf{B}$ (which must have the same size!).

Scalar Multiplication

$$\text{If} \quad \mathbf{A} = \begin{bmatrix} 2.7 & -1.8 \\ 0 & 0.9 \\ 9.0 & -4.5 \end{bmatrix}, \quad \text{then} \quad -\mathbf{A} = \begin{bmatrix} -2.7 & 1.8 \\ 0 & -0.9 \\ -9.0 & 4.5 \end{bmatrix}, \quad \frac{10}{9}\mathbf{A} = \begin{bmatrix} 3 & -2 \\ 0 & 1 \\ 10 & -5 \end{bmatrix}, \quad 0\mathbf{A} = \begin{bmatrix} 0 & 0 \\ 0 & 0 \\ 0 & 0 \end{bmatrix}.$$

PROBLEM SET 7.1

Let

$$\mathbf{A} = \begin{bmatrix} 0 & 2 & 4 \\ 6 & 5 & 5 \\ 1 & 0 & -3 \end{bmatrix}, \quad \mathbf{B} = \begin{bmatrix} 0 & 5 & 2 \\ 5 & 3 & 4 \\ -2 & 4 & -2 \end{bmatrix}$$

$$\mathbf{C} = \begin{bmatrix} 5 & 2 \\ -2 & 4 \\ 1 & 0 \end{bmatrix}, \quad \mathbf{D} = \begin{bmatrix} -4 & 1 \\ 5 & 0 \\ 2 & -1 \end{bmatrix},$$

$$\mathbf{E} = \begin{bmatrix} 0 & 2 \\ 3 & 4 \\ 3 & -1 \end{bmatrix}$$

$$\mathbf{u} = \begin{bmatrix} 1.5 \\ 0 \\ -3.0 \end{bmatrix}, \quad \mathbf{v} = \begin{bmatrix} -1 \\ 3 \\ 2 \end{bmatrix}, \quad \mathbf{w} = \begin{bmatrix} -5 \\ -30 \\ 10 \end{bmatrix}.$$

8. $2\mathbf{A} + 4\mathbf{B}$, $4\mathbf{B} + 2\mathbf{A}$, $0\mathbf{A} + \mathbf{B}$, $0.4\mathbf{B} - 4.2\mathbf{A}$

9. $3\mathbf{A}$, $0.5\mathbf{B}$, $3\mathbf{A} + 0.5\mathbf{B}$, $3\mathbf{A} + 0.5\mathbf{B} + \mathbf{C}$

10. $(4 \cdot 3)\mathbf{A}$, $4(3\mathbf{A})$, $14\mathbf{B} - 3\mathbf{B}$, $11\mathbf{B}$

11. $8\mathbf{C} + 10\mathbf{D}$, $2(5\mathbf{D} + 4\mathbf{C})$, $0.6\mathbf{C} - 0.6\mathbf{D}$, $0.6(\mathbf{C} - \mathbf{D})$

12. $(\mathbf{C} + \mathbf{D}) + \mathbf{E}$, $(\mathbf{D} + \mathbf{E}) + \mathbf{C}$, $0(\mathbf{C} - \mathbf{E}) + 4\mathbf{D}$, $\mathbf{A} - 0\mathbf{C}$

13. $(2 \cdot 7)\mathbf{C}$, $2(7\mathbf{C})$, $-\mathbf{D} + 0\mathbf{E}$, $\mathbf{E} - \mathbf{D} + \mathbf{C} + \mathbf{u}$

14. $(5\mathbf{u} + 5\mathbf{v}) - \frac{1}{2}\mathbf{w}$, $-20(\mathbf{u} + \mathbf{v}) + 2\mathbf{w}$, $\mathbf{E} - (\mathbf{u} + \mathbf{v})$, $10(\mathbf{u} + \mathbf{v}) + \mathbf{w}$

15. $(\mathbf{u} + \mathbf{v}) - \mathbf{w}$, $\mathbf{u} + (\mathbf{v} - \mathbf{w})$, $\mathbf{C} + 0\mathbf{w}$, $0\mathbf{E} + \mathbf{u} - \mathbf{v}$

16. $15\mathbf{v} - 3\mathbf{w} - 0\mathbf{u}$, $-3\mathbf{w} + 15\mathbf{v}$, $\mathbf{D} - \mathbf{u} + 3\mathbf{C}$, $8.5\mathbf{w} - 11.1\mathbf{u} + 0.4\mathbf{v}$

Nodal Incident Matrix

$\mathbf{A} = [a_{jk}]$, where

$$a_{jk} = \begin{cases} +1 \text{ if branch } k \text{ leaves node } j \\ -1 \text{ if branch } k \text{ enters node } j \\ 0 \text{ if branch } k \text{ does not touch node } j \end{cases}$$

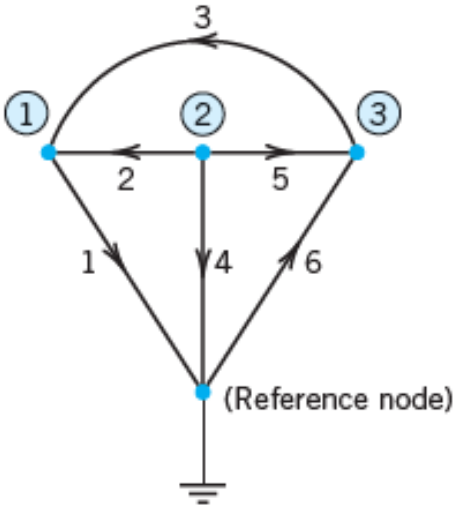

$$\begin{array}{c} \text{Branch} \\ \text{Node } 1 \\ \text{Node } 2 \\ \text{Node } 3 \end{array} \begin{array}{c} \begin{array}{cccccc} 1 & 2 & 3 & 4 & 5 & 6 \end{array} \\ \begin{bmatrix} 1 & -1 & -1 & 0 & 0 & 0 \\ 0 & 1 & 0 & 1 & 1 & 0 \\ 0 & 0 & 1 & 0 & -1 & -1 \end{bmatrix} \end{array}$$

Fig. 155. Network and nodal incidence matrix in Team Project 20(a)

(b) Find the nodal incidence matrices of the networks in Fig. 156.

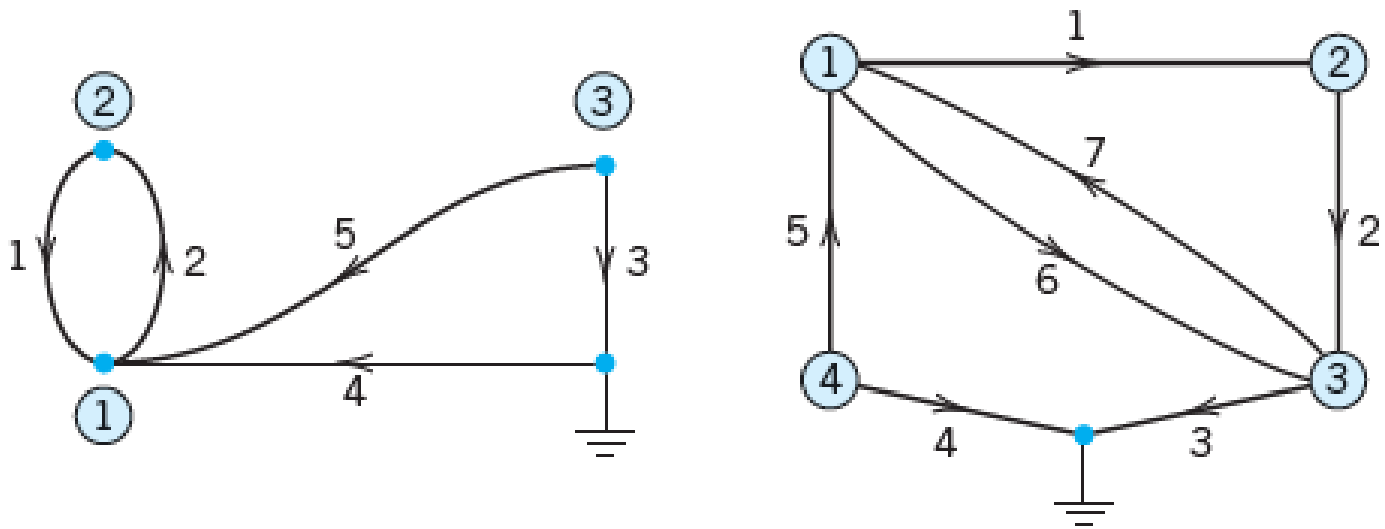

Fig. 156. Electrical networks in Team Project 20(b)

(c) Sketch the three networks corresponding to the nodal incidence matrices

$$\begin{bmatrix} 1 & 0 & 0 & 1 \\ -1 & 1 & 0 & 0 \\ 0 & -1 & 1 & 0 \end{bmatrix}, \begin{bmatrix} 1 & -1 & 0 & 0 & 1 \\ -1 & 1 & -1 & 1 & 0 \\ 0 & 0 & 1 & -1 & 0 \end{bmatrix},$$

$$\begin{bmatrix} 1 & 0 & 1 & 0 & 0 \\ -1 & 1 & 0 & 1 & 0 \\ 0 & -1 & -1 & 0 & 1 \end{bmatrix}.$$

Multiplication of Matrices

Multiplication of a Matrix by a Matrix

The **product** $\mathbf{C} = \mathbf{AB}$ (in this order) of an $m \times n$ matrix $\mathbf{A} = [a_{jk}]$ times an $r \times p$ matrix $\mathbf{B} = [b_{jk}]$ is defined if and only if $r = n$ and is then the $m \times p$ matrix $\mathbf{C} = [c_{jk}]$ with entries

$$c_{jk} = \sum_{l=1}^{n} a_{jl} b_{lk} = a_{j1} b_{1k} + a_{j2} b_{2k} + \cdots + a_{jn} b_{nk} \qquad \begin{array}{l} j = 1, \cdots, m \\ k = 1, \cdots, p. \end{array} \tag{1}$$

The condition $r = n$ means that the second factor, $\mathbf{B}$, must have as many rows as the first factor has columns, namely n. A diagram of sizes that shows when matrix multiplication is possible is as follows:

$$\begin{array}{ccccc} \mathbf{A} & \mathbf{B} & = & \mathbf{C} \\ [m \times n] & [n \times p] & = & [m \times p]. \end{array}$$

Multiplication of Matrices

$$m = 4 \left\{ \overbrace{\begin{bmatrix} a_{11} & a_{12} & a_{13} \\ a_{21} & a_{22} & a_{23} \\ a_{31} & a_{32} & a_{33} \\ a_{41} & a_{42} & a_{43} \end{bmatrix}}^{n=3} \right. \overbrace{\begin{bmatrix} b_{11} & b_{12} \\ b_{21} & b_{22} \\ b_{31} & b_{32} \end{bmatrix}}^{p=2} = \overbrace{\begin{bmatrix} c_{11} & c_{12} \\ c_{21} & c_{22} \\ c_{31} & c_{32} \\ c_{41} & c_{42} \end{bmatrix}}^{p=2} \left. \right\} m = 4$$

Notations in a product **AB** = **C**

$$\mathbf{AB} = \begin{bmatrix} 3 & 5 & -1 \\ 4 & 0 & 2 \\ -6 & -3 & 2 \end{bmatrix} \begin{bmatrix} 2 & -2 & 3 & 1 \\ 5 & 0 & 7 & 8 \\ 9 & -4 & 1 & 1 \end{bmatrix} = \begin{bmatrix} 22 & -2 & 43 & 42 \\ 26 & -16 & 14 & 6 \\ -9 & 4 & -37 & -28 \end{bmatrix}$$

CAUTION! Matrix Multiplication Is Not Commutative, $AB \neq BA$ in General

$$\begin{bmatrix} 1 & 1 \\ 100 & 100 \end{bmatrix}\begin{bmatrix} -1 & 1 \\ 1 & -1 \end{bmatrix} = \begin{bmatrix} 0 & 0 \\ 0 & 0 \end{bmatrix} \quad \text{but} \quad \begin{bmatrix} -1 & 1 \\ 1 & -1 \end{bmatrix}\begin{bmatrix} 1 & 1 \\ 100 & 100 \end{bmatrix} = \begin{bmatrix} 99 & 99 \\ -99 & -99 \end{bmatrix}.$$

Ma trận tam giác trên là ma trận vuông có tất cả các phần tử phía dưới đường chéo bằng 0.

$$\begin{bmatrix} a_{11} & a_{12} & \dots & a_{1n} \\ 0 & a_{22} & \dots & a_{2n} \\ . & . & \dots & . \\ 0 & 0 & \dots & a_{nn} \end{bmatrix}$$

Ma trận tam giác dưới là ma trận vuông có tất cả các phần tử phía trên đường chéo bằng 0.

$$\begin{bmatrix} a_{11} & 0 & \dots & 0 \\ a_{21} & a_{22} & \dots & 0 \\ . & . & \dots & . \\ a_{n1} & a_{n2} & \dots & a_{nn} \end{bmatrix}$$

Ma trận chéo là ma trận vuông có tất cả các phần tử ngoài đường chéo bằng 0.

$$\begin{bmatrix} a_{11} & 0 & \dots & 0 \\ 0 & a_{22} & \dots & 0 \\ . & . & \dots & . \\ 0 & 0 & \dots & a_{nn} \end{bmatrix}$$

▷ Ma trận A là ma trận chéo khi và chỉ khi vừa là ma trận tam giác trên vừa là ma trận tam giác dưới.

Ma trận đơn vị là ma trận chéo có tất cả các phần tử trên đường chéo bằng 1.

Transposition of Matrices and Vectors

If $$\mathbf{A} = \begin{bmatrix} 5 & -8 & 1 \\ 4 & 0 & 0 \end{bmatrix}, \quad \text{then} \quad \mathbf{A}^{\mathsf{T}} = \begin{bmatrix} 5 & 4 \\ -8 & 0 \\ 1 & 0 \end{bmatrix}.$$

$$[6 \quad 2 \quad 3]^{\mathsf{T}} = \begin{bmatrix} 6 \\ 2 \\ 3 \end{bmatrix}. \qquad \text{Conversely,} \qquad \begin{bmatrix} 6 \\ 2 \\ 3 \end{bmatrix}^{\mathsf{T}} = [6 \quad 2 \quad 3].$$

(a) $$(\mathbf{A}^{\mathsf{T}})^{\mathsf{T}} = \mathbf{A}$$

(b) $$(\mathbf{A} + \mathbf{B})^{\mathsf{T}} = \mathbf{A}^{\mathsf{T}} + \mathbf{B}^{\mathsf{T}}$$

(c) $$(c\mathbf{A})^{\mathsf{T}} = c\mathbf{A}^{\mathsf{T}}$$

(d) $$(\mathbf{AB})^{\mathsf{T}} = \mathbf{B}^{\mathsf{T}}\mathbf{A}^{\mathsf{T}}.$$

PROBLEM SET 7.2

Let

$$\mathbf{A} = \begin{bmatrix} 4 & -2 & 3 \\ -2 & 1 & 6 \\ 1 & 2 & 2 \end{bmatrix}, \quad \mathbf{B} = \begin{bmatrix} 1 & -3 & 0 \\ -3 & 1 & 0 \\ 0 & 0 & -2 \end{bmatrix}$$

$$\mathbf{C} = \begin{bmatrix} 0 & 1 \\ 3 & 2 \\ -2 & 0 \end{bmatrix}, \quad \mathbf{a} = [1 \quad -2 \quad 0], \quad \mathbf{b} = \begin{bmatrix} 3 \\ 1 \\ -1 \end{bmatrix}.$$

Showing all intermediate results, calculate the following expressions or give reasons why they are undefined:

11. $\mathbf{AB}$, $\mathbf{AB}^T$, $\mathbf{BA}$, $\mathbf{B}^T\mathbf{A}$

12. $\mathbf{AA}^T$, $\mathbf{A}^2$, $\mathbf{BB}^T$, $\mathbf{B}^2$

13. $\mathbf{CC}^T$, $\mathbf{BC}$, $\mathbf{CB}$, $\mathbf{C}^T\mathbf{B}$

14. $3\mathbf{A} - 2\mathbf{B}$, $(3\mathbf{A} - 2\mathbf{B})^T$, $3\mathbf{A}^T - 2\mathbf{B}^T$, $(3\mathbf{A} - 2\mathbf{B})^T\mathbf{a}^T$

15. $\mathbf{Aa}$, $\mathbf{Aa}^T$, $(\mathbf{Ab})^T$, $\mathbf{b}^T\mathbf{A}^T$

16. $\mathbf{BC}$, $\mathbf{BC}^T$, $\mathbf{Bb}$, $\mathbf{b}^T\mathbf{B}$

17. $\mathbf{ABC}$, $\mathbf{ABa}$, $\mathbf{ABb}$, $\mathbf{Ca}^T$

18. $\mathbf{ab}$, $\mathbf{ba}$, $\mathbf{aA}$, $\mathbf{Bb}$

19. $1.5\mathbf{a} + 3.0\mathbf{b}$, $1.5\mathbf{a}^T + 3.0\mathbf{b}$, $(\mathbf{A} - \mathbf{B})\mathbf{b}$, $\mathbf{Ab} - \mathbf{Bb}$

20. $\mathbf{b}^T\mathbf{Ab}$, $\mathbf{aBa}^T$, $\mathbf{aCC}^T$, $\mathbf{C}^T\mathbf{ba}$

Linear System, Coefficient Matrix, Augmented Matrix

A **linear system of m equations in n unknowns** $x_1, \cdots, x_n$ is a set of equations of the form

$$
\begin{aligned}
a_{11}x_1 + \cdots + a_{1n}x_n &= b_1 \\
a_{21}x_1 + \cdots + a_{2n}x_n &= b_2 \\
\cdots\cdots\cdots\cdots\cdots\cdots\cdots\cdots \\
a_{m1}x_1 + \cdots + a_{mn}x_n &= b_m.
\end{aligned}
\tag{1}
$$

$$
\mathbf{Ax} = \mathbf{b} \tag{2}
$$

where the **coefficient matrix** $\mathbf{A} = [a_{jk}]$ is the $m \times n$ matrix

$$
\mathbf{A} = \begin{bmatrix} a_{11} & a_{12} & \cdots & a_{1n} \\ a_{21} & a_{22} & \cdots & a_{2n} \\ \cdot & \cdot & \cdots & \cdot \\ a_{m1} & a_{m2} & \cdots & a_{mn} \end{bmatrix}, \quad \text{and} \quad \mathbf{x} = \begin{bmatrix} x_1 \\ \cdot \\ \cdot \\ \cdot \\ x_n \end{bmatrix} \quad \text{and} \quad \mathbf{b} = \begin{bmatrix} b_1 \\ \vdots \\ b_m \end{bmatrix}
$$

$$\tilde{\mathbf{A}} = \left[\begin{array}{ccc|c} a_{11} & \cdots & a_{1n} & b_1 \\ \cdot & \cdots & \cdot & \cdot \\ \cdot & \cdots & \cdot & \cdot \\ a_{m1} & \cdots & a_{mn} & b_m \end{array}\right]$$ is called the **augmented matrix** of the system (1).

We are given a system of linear equations, briefly a **linear system**, such as

$$\begin{aligned} 4x_1 + 6x_2 + 9x_3 &= 6 \\ 6x_1 \qquad\quad - 2x_3 &= 20 \\ 5x_1 - 8x_2 + x_3 &= 10 \end{aligned}$$

$$\mathbf{A} = \begin{bmatrix} 4 & 6 & 9 \\ 6 & 0 & -2 \\ 5 & -8 & 1 \end{bmatrix}.$$ We form another matrix $$\tilde{\mathbf{A}} = \begin{bmatrix} 4 & 6 & 9 & 6 \\ 6 & 0 & -2 & 20 \\ 5 & -8 & 1 & 10 \end{bmatrix}$$

Gauss Elimination:

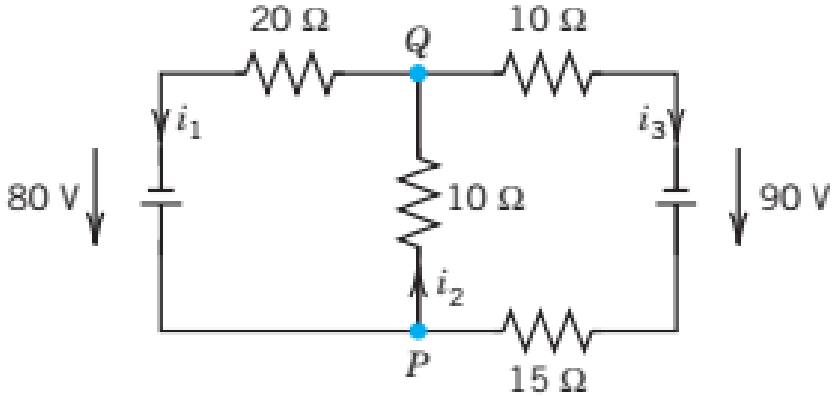

Node P: $i_1 - i_2 + i_3 = 0$

Node Q: $-i_1 + i_2 - i_3 = 0$

Right loop: $10i_2 + 25i_3 = 90$

Left loop: $20i_1 + 10i_2 = 80$

Augmented Matrix $\tilde{\mathbf{A}}$

Pivot 1 →

Eliminate →

$$\left[\begin{array}{ccc|c} 1 & -1 & 1 & 0 \\ -1 & 1 & -1 & 0 \\ 0 & 10 & 25 & 90 \\ 20 & 10 & 0 & 80 \end{array}\right] \qquad \left[\begin{array}{ccc|c} 1 & -1 & 1 & 0 \\ 0 & 0 & 0 & 0 \\ 0 & 10 & 25 & 90 \\ 0 & 30 & -20 & 80 \end{array}\right]$$

Row 2 + Row 1

Row 4 − 20 Row 1

Pivot 10 →

Eliminate 30 →

$$\left[\begin{array}{ccc|c} 1 & -1 & 1 & 0 \\ 0 & 10 & 25 & 90 \\ 0 & 30 & -20 & 80 \\ 0 & 0 & 0 & 0 \end{array}\right] \qquad \left[\begin{array}{ccc|c} 1 & -1 & 1 & 0 \\ 0 & 10 & 25 & 90 \\ 0 & 0 & -95 & -190 \\ 0 & 0 & 0 & 0 \end{array}\right]$$

Row 3 − 3 Row 2

$i_3 = 2\,[\mathrm{A}]$

$i_2 = 4\,[\mathrm{A}]$

$i_1 = 2\,[\mathrm{A}]$

PROBLEM SET 7.3

1.
$$\begin{aligned} 4x - 6y &= -11 \\ -3x + 8y &= 10 \end{aligned}$$

3.
$$\begin{aligned} x + y - z &= 9 \\ 8y + 6z &= -6 \\ -2x + 4y - 6z &= 40 \end{aligned}$$

13.
$$\begin{aligned} 10x + 4y - 2z &= -4 \\ -3w - 17x + y + 2z &= 2 \\ w + x + y &= 6 \\ 8w - 34x + 16y - 10z &= 4 \end{aligned}$$

17.

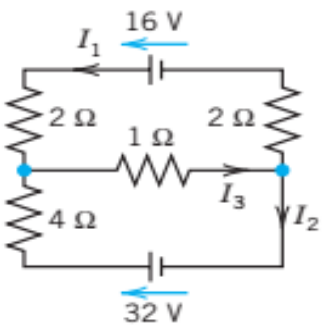

18.

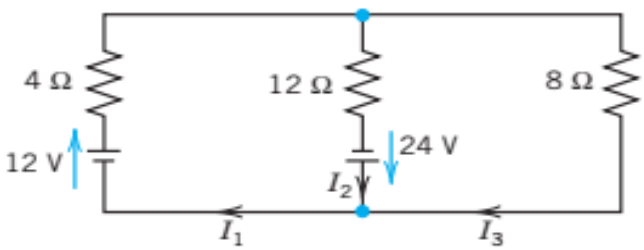

19.

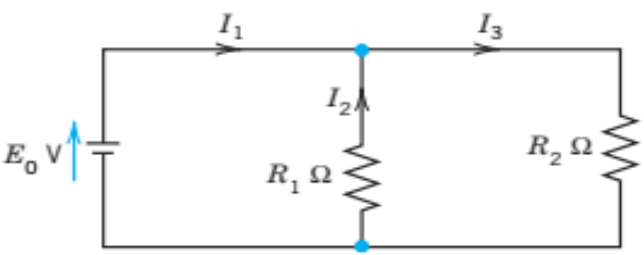

Rank of a Matrix.

Cách tìm hạng của ma trận

- ▷ Đưa ma trận về dạng bậc thang.
- ▷ Hạng của ma trận là số dòng khác 0.

EXAMPLE 3 Determination of Rank

For the matrix in Example 2 we obtain successively

$$\mathbf{A} = \begin{bmatrix} 3 & 0 & 2 & 2 \\ -6 & 42 & 24 & 54 \\ 21 & -21 & 0 & -15 \end{bmatrix} \quad \text{(given)}$$

$$\begin{bmatrix} 3 & 0 & 2 & 2 \\ 0 & 42 & 28 & 58 \\ 0 & -21 & -14 & -29 \end{bmatrix} \begin{matrix} \\ \text{Row 2} + 2\,\text{Row 1} \\ \text{Row 3} - 7\,\text{Row 1} \end{matrix}$$

$$\begin{bmatrix} 3 & 0 & 2 & 2 \\ 0 & 42 & 28 & 58 \\ 0 & 0 & 0 & 0 \end{bmatrix} \begin{matrix} \\ \\ \text{Row 3} + \frac{1}{2}\,\text{Row 2.} \end{matrix}$$

The last matrix is in row-echelon form and has two nonzero rows. Hence rank $\mathbf{A} = 2$, as before.

Find the rank

$$\begin{bmatrix} 1 & 2 & 3 & 4 \\ 2 & 3 & 4 & 5 \\ 3 & 4 & 5 & 6 \\ 4 & 5 & 6 & 7 \end{bmatrix}$$

Row reduction gives

$$\begin{bmatrix} 1 & 2 & 3 & 4 \\ 0 & -1 & -2 & -3 \\ 0 & 0 & 0 & 0 \\ 0 & 0 & 0 & 0 \end{bmatrix}.$$

Hence the rank is 2

Find the rank

$$\begin{bmatrix} 0 & 0 & -7 & 1 \\ 0 & 0 & 5 & 0 \\ -7 & 5 & 0 & 2 \\ 1 & 0 & 2 & 0 \end{bmatrix}$$

Row reduction gives

$$\begin{bmatrix} -7 & 5 & 0 & 2 \\ 0 & 5/7 & 2 & 2/7 \\ 0 & 0 & -7 & 1 \\ 0 & 0 & 0 & 5/7 \end{bmatrix}$$

Hence the ranks is 4

PROBLEM SET 7.4

Find the rank.

1. $\begin{bmatrix} 4 & -2 & 6 \\ -2 & 1 & -3 \end{bmatrix}$

2. $\begin{bmatrix} a & b \\ b & a \end{bmatrix}$

3. $\begin{bmatrix} 0 & 3 & 5 \\ 3 & 5 & 0 \\ 5 & 0 & 10 \end{bmatrix}$

4. $\begin{bmatrix} 6 & -4 & 0 \\ -4 & 0 & 2 \\ 0 & 2 & 6 \end{bmatrix}$

5. $\begin{bmatrix} 0.2 & -0.1 & 0.4 \\ 0 & 1.1 & -0.3 \\ 0.1 & 0 & -2.1 \end{bmatrix}$

6. $\begin{bmatrix} 0 & 1 & 0 \\ -1 & 0 & -4 \\ 0 & 4 & 0 \end{bmatrix}$

7. $\begin{bmatrix} 8 & 0 & 4 & 0 \\ 0 & 2 & 0 & 4 \\ 4 & 0 & 2 & 0 \end{bmatrix}$

8. $\begin{bmatrix} 2 & 4 & 8 & 16 \\ 16 & 8 & 4 & 2 \\ 4 & 8 & 16 & 2 \\ 2 & 16 & 8 & 4 \end{bmatrix}$

9. $\begin{bmatrix} 9 & 0 & 1 & 0 \\ 0 & 0 & 1 & 0 \\ 1 & 1 & 1 & 1 \\ 0 & 0 & 1 & 0 \end{bmatrix}$

10. $\begin{bmatrix} 5 & -2 & 1 & 0 \\ -2 & 0 & -4 & 1 \\ 1 & -4 & -11 & 2 \\ 0 & 1 & 2 & 0 \end{bmatrix}$

Determinants

A **determinant of second order** is denoted and defined by

$$D = \det \mathbf{A} = \begin{vmatrix} a_{11} & a_{12} \\ a_{21} & a_{22} \end{vmatrix} = a_{11}a_{22} - a_{12}a_{21}. \tag{1}$$

A **determinant of third order** can be defined by

$$D = \begin{vmatrix} a_{11} & a_{12} & a_{13} \\ a_{21} & a_{22} & a_{23} \\ a_{31} & a_{32} & a_{33} \end{vmatrix} = a_{11}\begin{vmatrix} a_{22} & a_{23} \\ a_{32} & a_{33} \end{vmatrix} - a_{21}\begin{vmatrix} a_{12} & a_{13} \\ a_{32} & a_{33} \end{vmatrix} + a_{31}\begin{vmatrix} a_{12} & a_{13} \\ a_{22} & a_{23} \end{vmatrix}. \tag{4}$$

$$D = \sum_{k=1}^{n} (-1)^{j+k} a_{jk} M_{jk}$$

$$D = \sum_{j=1}^{n} (-1)^{j+k} a_{jk} M_{jk}$$

$$\begin{matrix} + & - & + \\ - & + & - \\ + & - & + \end{matrix}$$

3 × 3 matrix

Expansions of a Third-Order Determinant

$$D = \begin{vmatrix} 1 & 3 & 0 \\ 2 & 6 & 4 \\ -1 & 0 & 2 \end{vmatrix} = 1\begin{vmatrix} 6 & 4 \\ 0 & 2 \end{vmatrix} - 3\begin{vmatrix} 2 & 4 \\ -1 & 2 \end{vmatrix} + 0\begin{vmatrix} 2 & 6 \\ -1 & 0 \end{vmatrix}$$

$$= 1(12 - 0) - 3(4 + 4) + 0(0 + 6) = -12.$$

This is the expansion by the first row. The expansion by the third column is

$$D = 0\begin{vmatrix} 2 & 6 \\ -1 & 0 \end{vmatrix} - 4\begin{vmatrix} 1 & 3 \\ -1 & 0 \end{vmatrix} + 2\begin{vmatrix} 1 & 3 \\ 2 & 6 \end{vmatrix} = 0 - 12 + 0 = -12.$$

Verify that the other four expansions also give the value -12.

Determinant of a Triangular Matrix

$$\begin{vmatrix} -3 & 0 & 0 \\ 6 & 4 & 0 \\ -1 & 2 & 5 \end{vmatrix} = -3\begin{vmatrix} 4 & 0 \\ 2 & 5 \end{vmatrix} = -3 \cdot 4 \cdot 5 = -60.$$

Large determinants

$$\begin{vmatrix} a & b & c & d \\ e & f & g & h \\ i & j & k & l \\ m & n & o & p \end{vmatrix}$$

$$= a\begin{vmatrix} f & g & h \\ j & k & l \\ n & o & p \end{vmatrix} - e\begin{vmatrix} b & c & d \\ j & k & l \\ n & o & p \end{vmatrix} + i\begin{vmatrix} b & c & d \\ f & g & h \\ n & o & p \end{vmatrix} - m\begin{vmatrix} b & c & d \\ f & g & h \\ j & k & l \end{vmatrix}$$

$$\begin{matrix} + & - & + & - \\ - & + & - & + \\ + & - & + & - \\ - & + & - & + \end{matrix} \qquad \begin{matrix} + & - & + & - & + & \cdots \\ - & + & - & + & - & \cdots \\ + & - & + & - & + & \cdots \\ - & + & - & + & - & \cdots \\ + & - & + & - & + & \cdots \\ \vdots & \vdots & \vdots & \vdots & \vdots & \end{matrix}$$

4×4 matrix **$n \times n$ matrix**

PROBLEM SET 7.7

7. $\begin{vmatrix} \cos\alpha & \sin\alpha \\ \sin\beta & \cos\beta \end{vmatrix}$

8. $\begin{vmatrix} 0.4 & 4.9 \\ 1.5 & -1.3 \end{vmatrix}$

9. $\begin{vmatrix} \cos n\theta & \sin n\theta \\ -\sin n\theta & \cos n\theta \end{vmatrix}$

10. $\begin{vmatrix} \cosh t & \sinh t \\ \sinh t & \cosh t \end{vmatrix}$

11. $\begin{vmatrix} 4 & -1 & 8 \\ 0 & 2 & 3 \\ 0 & 0 & 5 \end{vmatrix}$

12. $\begin{vmatrix} a & b & c \\ c & a & b \\ b & c & a \end{vmatrix}$

13. $\begin{vmatrix} 0 & 4 & -1 & 5 \\ -4 & 0 & 3 & -2 \\ 1 & -3 & 0 & 1 \\ -5 & 2 & -1 & 0 \end{vmatrix}$

14. $\begin{vmatrix} 4 & 7 & 0 & 0 \\ 2 & 8 & 0 & 0 \\ 0 & 0 & 1 & 5 \\ 0 & 0 & -2 & 2 \end{vmatrix}$

Cramer's Theorem

Cramer's Theorem (Solution of Linear Systems by Determinants)

(a) *If a linear system of n equations in the same number of unknowns* $x_1, \cdots, x_n$

$$
\begin{aligned}
a_{11}x_1 + a_{12}x_2 + \cdots + a_{1n}x_n &= b_1 \\
a_{21}x_1 + a_{22}x_2 + \cdots + a_{2n}x_n &= b_2 \\
\cdots\cdots\cdots\cdots\cdots\cdots \\
a_{n1}x_1 + a_{n2}x_2 + \cdots + a_{nn}x_n &= b_n
\end{aligned}
\tag{6}
$$

has a nonzero coefficient determinant $D = \det \mathbf{A}$, *the system has precisely one solution. This solution is given by the formulas*

$$
x_1 = \frac{D_1}{D}, \quad x_2 = \frac{D_2}{D}, \cdots, \quad x_n = \frac{D_n}{D} \qquad \textbf{(Cramer's rule)} \tag{7}
$$

Cramer's rule for solving linear systems of two equations in two unknowns

$$\text{(2)} \qquad \begin{aligned} &\text{(a)} \quad a_{11}x_1 + a_{12}x_2 = b_1 \\ &\text{(b)} \quad a_{21}x_1 + a_{22}x_2 = b_2 \end{aligned}$$

is

$$\text{(3)} \qquad \begin{aligned} x_1 &= \frac{\begin{vmatrix} b_1 & a_{12} \\ b_2 & a_{22} \end{vmatrix}}{D} = \frac{b_1a_{22} - a_{12}b_2}{D}, \\ x_2 &= \frac{\begin{vmatrix} a_{11} & b_1 \\ a_{21} & b_2 \end{vmatrix}}{D} = \frac{a_{11}b_2 - b_1a_{21}}{D} \end{aligned}$$

Cramer's Rule for Linear Systems of Three Equations

$$
\begin{aligned}
a_{11}x_1 + a_{12}x_2 + a_{13}x_3 &= b_1 \\
a_{21}x_1 + a_{22}x_2 + a_{23}x_3 &= b_2 \qquad (5) \\
a_{31}x_1 + a_{32}x_2 + a_{33}x_3 &= b_3
\end{aligned}
$$

is

$$x_1 = \frac{D_1}{D}, \quad x_2 = \frac{D_2}{D}, \quad x_3 = \frac{D_3}{D} \qquad (D \neq 0) \qquad (6)$$

with the *determinant D of the system* given by (4) and

$$D_1 = \begin{vmatrix} b_1 & a_{12} & a_{13} \\ b_2 & a_{22} & a_{23} \\ b_3 & a_{32} & a_{33} \end{vmatrix}, \quad D_2 = \begin{vmatrix} a_{11} & b_1 & a_{13} \\ a_{21} & b_2 & a_{23} \\ a_{31} & b_3 & a_{33} \end{vmatrix}, \quad D_3 = \begin{vmatrix} a_{11} & a_{12} & b_1 \\ a_{21} & a_{22} & b_2 \\ a_{31} & a_{32} & b_3 \end{vmatrix}.$$

Use Cramer's rule to solve the system

$$\begin{aligned} 3x_1 + 2x_2 + x_3 &= 7 \\ x_1 - x_2 + 3x_3 &= 3 \\ 5x_1 + 4x_2 - 2x_3 &= 1. \end{aligned}$$

SOLUTION The solution requires the evaluation of four determinants:

$$\det \mathbf{A} = \begin{vmatrix} 3 & 2 & 1 \\ 1 & -1 & 3 \\ 5 & 4 & -2 \end{vmatrix} = 13, \qquad \det \mathbf{A}_1 = \begin{vmatrix} 7 & 2 & 1 \\ 3 & -1 & 3 \\ 1 & 4 & -2 \end{vmatrix} = -39,$$

$$\det \mathbf{A}_2 = \begin{vmatrix} 3 & 7 & 1 \\ 1 & 3 & 3 \\ 5 & 1 & -2 \end{vmatrix} = 78, \qquad \det \mathbf{A}_3 = \begin{vmatrix} 3 & 2 & 7 \\ 1 & -1 & 3 \\ 5 & 4 & 1 \end{vmatrix} = 52.$$

Thus, (6) gives

$$x_1 = \frac{\det \mathbf{A}_1}{\det \mathbf{A}} = -3, \quad x_2 = \frac{\det \mathbf{A}_2}{\det \mathbf{A}} = 6, \quad x_3 = \frac{\det \mathbf{A}_3}{\det \mathbf{A}} = 4.$$

Find the Currents using Cramer's rule

Example Find I_1, I_2 and I_3 in the circuit

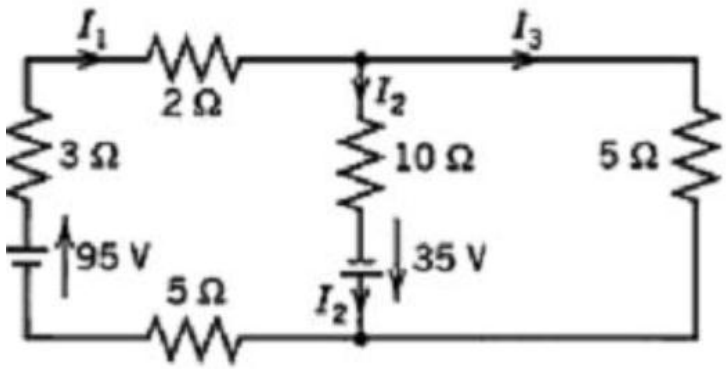

$$\begin{cases} I_1 - I_2 - I_3 = 0 \\ 10I_1 + 10I_2 = 130 \\ 10I_2 - 5I_3 = 35 \end{cases} \qquad D = \begin{vmatrix} 1 & -1 & -1 \\ 10 & 10 & 0 \\ 0 & 10 & -5 \end{vmatrix}$$

$$D_1 = \begin{vmatrix} 0 & -1 & -1 \\ 130 & 10 & 0 \\ 35 & 10 & -5 \end{vmatrix} \quad D_2 = \begin{vmatrix} 1 & 0 & -1 \\ 10 & 130 & 0 \\ 0 & 35 & -5 \end{vmatrix} \quad D_3 = \begin{vmatrix} 1 & -1 & 0 \\ 10 & 10 & 130 \\ 0 & 10 & 35 \end{vmatrix}$$

$$I_1 = D_1/D = 8 \qquad I_2 = D_2/D = 5 \qquad I_3 = D_3/D = 3$$

$$I_a(2+10+5+3) - 10I_b = 35 + 95$$

$$I_b(10+5) - 10I_a = -35$$

$$20I_a - 10I_b = 130$$

$$-10I_a + 15I_b = -35$$

$$I_a = 8$$

$$I_b = 3$$

$$I_1 = 8$$

$$I_3 = 3$$

mesh currents

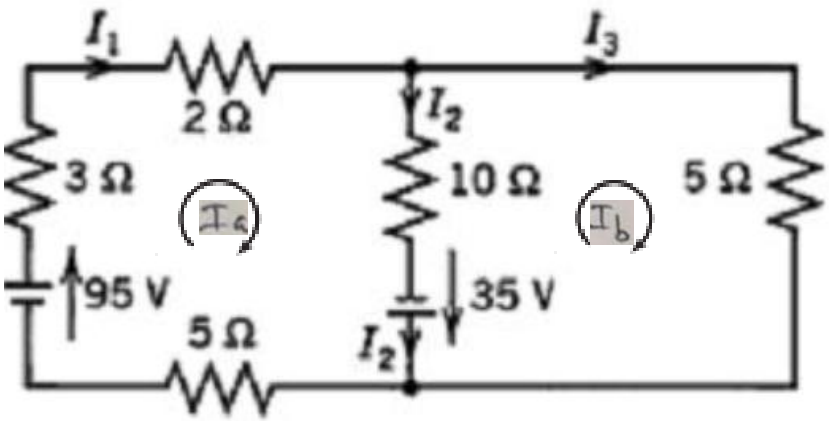

$$I_1 - I_2 - I_3 = 0$$

$$I_2 = 5$$

Example Find I_1, I_2 and I_3 in the circuit

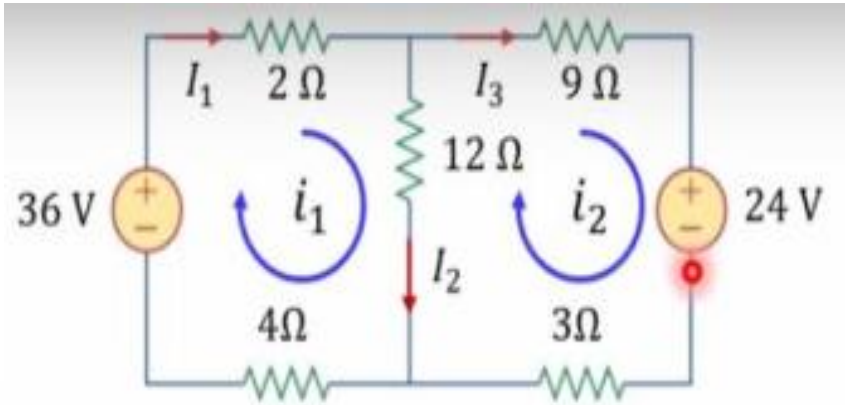

Solution

$$(2+12+4)i_1 - 12i_2 = 36 \quad (1)$$

$$(9+3+12)i_2 - 12i_1 = -24 \quad (2)$$

Solve (1), (2) $\quad i_1 = 2\text{ A};\ \ i_2 = 0$

$$I_1 = i_1 = 2\text{ A};\quad I_3 = i_2 = 0;\quad I_2 = i_1 - i_2 = 2\text{ A}$$

PROBLEM SET 7.7

21.
$$\begin{aligned} 3x - 5y &= 15.5 \\ 6x + 16y &= 5.0 \end{aligned}$$

22.
$$\begin{aligned} 2x - 4y &= -24 \\ 5x + 2y &= 0 \end{aligned}$$

23.
$$\begin{aligned} 3y - 4z &= 16 \\ 2x - 5y + 7z &= -27 \\ -x \qquad - 9z &= 9 \end{aligned}$$

24.
$$\begin{aligned} 3x - 2y + z &= 13 \\ -2x + y + 4z &= 11 \\ x + 4y - 5z &= -31 \end{aligned}$$

25.
$$\begin{aligned} -4w + x + y \qquad &= -10 \\ w - 4x \qquad + z &= 1 \\ w \qquad - 4y + z &= -7 \\ x + y - 4z &= 10 \end{aligned}$$

Inverse of a Matrix

The **inverse** of an $n \times n$ matrix $\mathbf{A} = [a_{jk}]$ is denoted by $\mathbf{A}^{-1}$ and is an $n \times n$ matrix such that

$$\mathbf{A}\mathbf{A}^{-1} = \mathbf{A}^{-1}\mathbf{A} = \mathbf{I} \tag{1}$$

Let $\mathbf{A}$ be a given $n \times n$ matrix and consider the linear system

$$\mathbf{A}\mathbf{x} = \mathbf{b}. \tag{2}$$

If the inverse $\mathbf{A}^{-1}$ exists, then multiplication from the left on both sides and use of (1) gives

$$\mathbf{A}^{-1}\mathbf{A}\mathbf{x} = \mathbf{x} = \mathbf{A}^{-1}\mathbf{b}.$$

Cách tìm ma trận đảo

(Gauss–Jordan Method)

- ▷ Lập ma trận mở rộng $(A|I)$.
- ▷ Biến đổi ma trận $(A|I)$ về dạng $(I|B)$.

$$B = A^{-1}.$$

EXAMPLE 1 **Finding the Inverse of a Matrix by Gauss–Jordan Elimination**

Determine the inverse $\mathbf{A}^{-1}$ of

$$\mathbf{A} = \begin{bmatrix} -1 & 1 & 2 \\ 3 & -1 & 1 \\ -1 & 3 & 4 \end{bmatrix}.$$

Solution. We apply the Gauss elimination (Sec. 7.3) to the following $n \times 2n = 3 \times 6$ matrix, where BLUE always refers to the previous matrix.

$$[\mathbf{A} \quad \mathbf{I}] = \left[\begin{array}{ccc|ccc} -1 & 1 & 2 & 1 & 0 & 0 \\ 3 & -1 & 1 & 0 & 1 & 0 \\ -1 & 3 & 4 & 0 & 0 & 1 \end{array}\right]$$

$$\left[\begin{array}{ccc|ccc} -1 & 1 & 2 & 1 & 0 & 0 \\ 0 & 2 & 7 & 3 & 1 & 0 \\ 0 & 2 & 2 & -1 & 0 & 1 \end{array}\right] \begin{array}{l} \\ \text{Row 2} + 3\,\text{Row 1} \\ \text{Row 3} - \text{Row 1} \end{array}$$

$$\left[\begin{array}{ccc|ccc} -1 & 1 & 2 & 1 & 0 & 0 \\ 0 & 2 & 7 & 3 & 1 & 0 \\ 0 & 0 & -5 & -4 & -1 & 1 \end{array}\right] \begin{array}{l} \\ \\ \text{Row 3} - \text{Row 2} \end{array}$$

$$\left[\begin{array}{ccc|ccc} 1 & -1 & -2 & -1 & 0 & 0 \\ 0 & 1 & 3.5 & 1.5 & 0.5 & 0 \\ 0 & 0 & 1 & 0.8 & 0.2 & -0.2 \end{array}\right] \begin{array}{l} -\text{Row } 1 \\ 0.5 \text{ Row } 2 \\ -0.2 \text{ Row } 3 \end{array}$$

$$\left[\begin{array}{ccc|ccc} 1 & -1 & 0 & 0.6 & 0.4 & -0.4 \\ 0 & 1 & 0 & -1.3 & -0.2 & 0.7 \\ 0 & 0 & 1 & 0.8 & 0.2 & -0.2 \end{array}\right] \begin{array}{l} \text{Row } 1 + 2 \text{ Row } 3 \\ \text{Row } 2 - 3.5 \text{ Row } 3 \\ \end{array}$$

$$\left[\begin{array}{ccc|ccc} 1 & 0 & 0 & -0.7 & 0.2 & 0.3 \\ 0 & 1 & 0 & -1.3 & -0.2 & 0.7 \\ 0 & 0 & 1 & 0.8 & 0.2 & -0.2 \end{array}\right] \begin{array}{l} \text{Row } 1 + \text{Row } 2 \\ \\ \end{array}$$

The last three columns constitute $\mathbf{A}^{-1}$. Check:

$$\begin{bmatrix} -1 & 1 & 2 \\ 3 & -1 & 1 \\ -1 & 3 & 4 \end{bmatrix} \begin{bmatrix} -0.7 & 0.2 & 0.3 \\ -1.3 & -0.2 & 0.7 \\ 0.8 & 0.2 & -0.2 \end{bmatrix} = \begin{bmatrix} 1 & 0 & 0 \\ 0 & 1 & 0 \\ 0 & 0 & 1 \end{bmatrix}.$$

Hence $\mathbf{AA}^{-1} = \mathbf{I}$. Similarly, $\mathbf{A}^{-1}\mathbf{A} = \mathbf{I}$.

Inverse of a Matrix by Determinants

The inverse of a nonsingular $n \times n$ matrix $\mathbf{A} = [a_{jk}]$ is given by

$$\mathbf{A}^{-1} = \frac{1}{\det \mathbf{A}}[C_{jk}]^{\mathsf{T}} = \frac{1}{\det \mathbf{A}}\begin{bmatrix} C_{11} & C_{21} & \cdots & C_{n1} \\ C_{12} & C_{22} & \cdots & C_{n2} \\ \cdot & \cdot & \cdots & \cdot \\ C_{1n} & C_{2n} & \cdots & C_{nn} \end{bmatrix}, \tag{4}$$

where C_{jk} is the cofactor of a_{jk} in det $\mathbf{A}$ (see Sec. 7.7). (CAUTION! Note well that in $\mathbf{A}^{-1}$, the cofactor C_{jk} occupies the same place as a_{kj} (not a_{jk}) does in $\mathbf{A}$.)

In particular, the inverse of

$$\mathbf{A} = \begin{bmatrix} a_{11} & a_{12} \\ a_{21} & a_{22} \end{bmatrix} \quad \textit{is} \quad \mathbf{A}^{-1} = \frac{1}{\det \mathbf{A}}\begin{bmatrix} a_{22} & -a_{12} \\ -a_{21} & a_{11} \end{bmatrix}. \tag{4*}$$

Inverse of a Matrix by Determinants

$$\mathbf{A} = \begin{bmatrix} a_{11} & a_{12} \\ a_{21} & a_{22} \end{bmatrix} \qquad \textit{is} \qquad \mathbf{A}^{-1} = \frac{1}{\det \mathbf{A}} \begin{bmatrix} a_{22} & -a_{12} \\ -a_{21} & a_{11} \end{bmatrix}.$$

Inverse of a 2 × 2 Matrix by Determinants

$$\mathbf{A} = \begin{bmatrix} 3 & 1 \\ 2 & 4 \end{bmatrix}, \quad \mathbf{A}^{-1} = \frac{1}{10} \begin{bmatrix} 4 & -1 \\ -2 & 3 \end{bmatrix} = \begin{bmatrix} 0.4 & -0.1 \\ -0.2 & 0.3 \end{bmatrix}$$

Inverse of a Matrix

Using (4), find the inverse of

$$\mathbf{A} = \begin{bmatrix} -1 & 1 & 2 \\ 3 & -1 & 1 \\ -1 & 3 & 4 \end{bmatrix}.$$

Solution. We obtain $\det \mathbf{A} = -1(-7) - 1 \cdot 13 + 2 \cdot 8 = 10$, and in (4),

$$C_{11} = \begin{vmatrix} -1 & 1 \\ 3 & 4 \end{vmatrix} = -7, \qquad C_{21} = -\begin{vmatrix} 1 & 2 \\ 3 & 4 \end{vmatrix} = 2, \qquad C_{31} = \begin{vmatrix} 1 & 2 \\ -1 & 1 \end{vmatrix} = 3,$$

$$C_{12} = -\begin{vmatrix} 3 & 1 \\ -1 & 4 \end{vmatrix} = -13, \quad C_{22} = \begin{vmatrix} -1 & 2 \\ -1 & 4 \end{vmatrix} = -2, \quad C_{32} = -\begin{vmatrix} -1 & 2 \\ 3 & 1 \end{vmatrix} = 7,$$

$$C_{13} = \begin{vmatrix} 3 & -1 \\ -1 & 3 \end{vmatrix} = 8, \qquad C_{23} = -\begin{vmatrix} -1 & 1 \\ -1 & 3 \end{vmatrix} = 2, \quad C_{33} = \begin{vmatrix} -1 & 1 \\ 3 & -1 \end{vmatrix} = -2,$$

so that by (4), in agreement with Example 1,

$$\mathbf{A}^{-1} = \begin{bmatrix} -0.7 & 0.2 & 0.3 \\ -1.3 & -0.2 & 0.7 \\ 0.8 & 0.2 & -0.2 \end{bmatrix}.$$

Find the Currents using Inverse Matrix

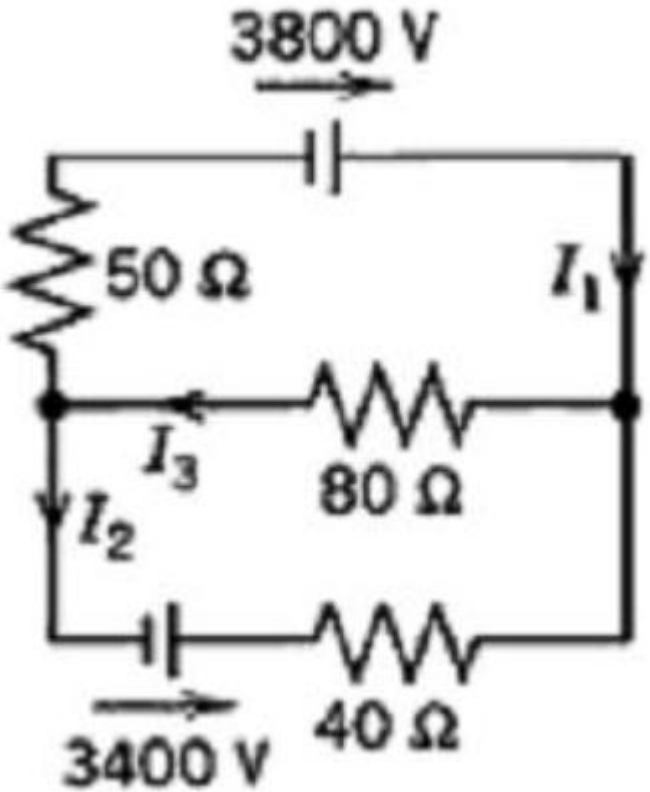

$$\begin{cases} -I_1 - I_2 + I_3 = 0 \\ 50I_1 + 80I_3 = 3800 \\ 40I_2 + 80I_3 = 3400 \end{cases}$$

$$\begin{cases} I_1 + I_2 - I_3 = 0 \\ 5I_1 + 8I_3 = 380 \\ I_2 + 2I_3 = 85 \end{cases}$$

$$A = \begin{bmatrix} 1 & 1 & -1 \\ 5 & 0 & 8 \\ 0 & 1 & 2 \end{bmatrix} \; ; \; b = \begin{bmatrix} 0 \\ 350 \\ 85 \end{bmatrix} \; ; \; x = \begin{bmatrix} I_1 \\ I_2 \\ I_3 \end{bmatrix}$$

$$\det A = \begin{vmatrix} 0 & 8 \\ 1 & 2 \end{vmatrix} - 5 \begin{vmatrix} 1 & -1 \\ 1 & 2 \end{vmatrix} + 0 \begin{vmatrix} 1 & -1 \\ 0 & 8 \end{vmatrix} = -23$$

$$C_{11} = \begin{vmatrix} 0 & 8 \\ 1 & 2 \end{vmatrix} = -8 \; ; \quad C_{21} = -\begin{vmatrix} 1 & -1 \\ 1 & 2 \end{vmatrix} = -3 \; ; \quad C_{31} = \begin{vmatrix} 1 & -1 \\ 0 & 8 \end{vmatrix} = 8$$

$$C_{12} = -\begin{vmatrix} 5 & 8 \\ 0 & 2 \end{vmatrix} = -10 \; ; \quad C_{22} = \begin{vmatrix} 1 & -1 \\ 0 & 2 \end{vmatrix} = 2 \; ; \quad C_{32} = -\begin{vmatrix} 1 & -1 \\ 5 & 8 \end{vmatrix} = -13$$

$$C_{13} = \begin{vmatrix} 5 & 0 \\ 0 & 1 \end{vmatrix} = 5 \; ; \quad C_{23} = -\begin{vmatrix} 1 & 1 \\ 0 & 1 \end{vmatrix} = -1 \; ; \quad C_{33} = \begin{vmatrix} 1 & 1 \\ 5 & 0 \end{vmatrix} = -5$$

$$\Rightarrow A^{-1} = \frac{1}{-23} \cdot \begin{bmatrix} -8 & -3 & 8 \\ -10 & 2 & -13 \\ 5 & -1 & -5 \end{bmatrix} = \begin{bmatrix} \frac{8}{23} & \frac{3}{23} & -\frac{8}{23} \\ \frac{10}{23} & -\frac{2}{23} & \frac{13}{23} \\ -\frac{5}{23} & \frac{1}{23} & \frac{5}{23} \end{bmatrix}$$

$$x = A^{-1}b = \begin{bmatrix} \frac{8}{23} & \frac{3}{23} & -\frac{8}{23} \\ \frac{10}{23} & -\frac{2}{23} & \frac{13}{23} \\ -\frac{5}{23} & \frac{1}{23} & \frac{5}{23} \end{bmatrix} \begin{bmatrix} 0 \\ 386 \\ 85 \end{bmatrix} = \begin{bmatrix} 20 \\ 15 \\ 35 \end{bmatrix} \qquad \begin{cases} I_1 = 20\,A \\ I_2 = 15\,A \\ I_3 = 35\,A \end{cases}$$

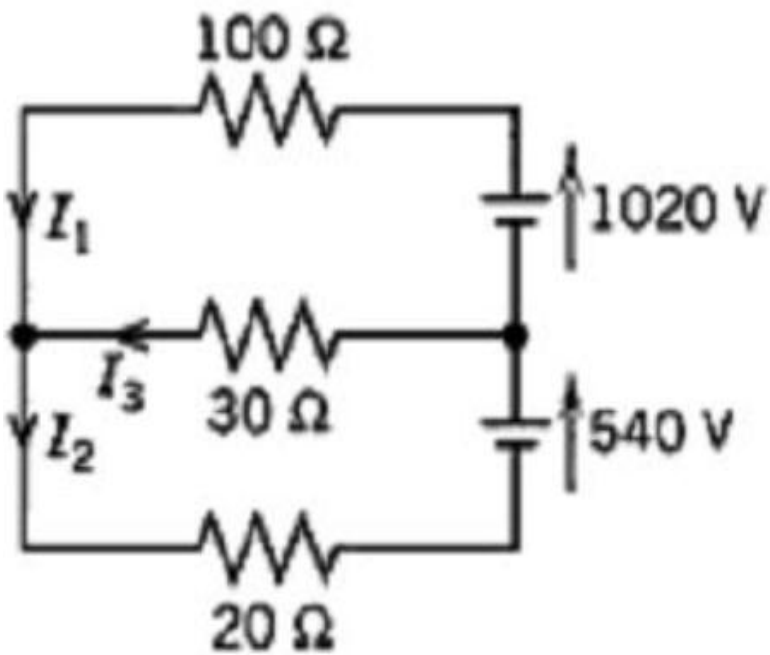

$$\begin{cases} -I_1 + I_2 - I_3 = 0 \\ 100I_1 - 30I_3 = 1020 \\ 20I_2 + 30I_3 = 540 \end{cases}$$

$$\Leftrightarrow \begin{cases} I_1 - I_2 + I_3 = 0 \\ 10I_1 - 3I_3 = 102 \\ 2I_2 + 3I_3 = 54 \end{cases}$$

$$A = \begin{bmatrix} 1 & -1 & 1 \\ 10 & 0 & -3 \\ 0 & 2 & 3 \end{bmatrix} ; \quad b = \begin{bmatrix} 0 \\ 102 \\ 54 \end{bmatrix} ; \quad x = \begin{bmatrix} I_1 \\ I_2 \\ I_3 \end{bmatrix}$$

$$\det A = \begin{vmatrix} 0 & -3 \\ 2 & 3 \end{vmatrix} - 10 \begin{vmatrix} -1 & 1 \\ 2 & 3 \end{vmatrix} + 0 \begin{vmatrix} -1 & 1 \\ 0 & -3 \end{vmatrix}$$

$$= 56$$

$$C_{11} = \begin{vmatrix} 0 & -3 \\ 2 & 3 \end{vmatrix} = 6 \quad ; \quad C_{21} = -\begin{vmatrix} -1 & 1 \\ 2 & 3 \end{vmatrix} = 5 \quad ; \quad C_{31} = \begin{vmatrix} -1 & 1 \\ 0 & -3 \end{vmatrix} = 3$$

$$C_{12} = -\begin{vmatrix} 10 & -3 \\ 0 & 3 \end{vmatrix} = -30 ; \quad C_{22} = \begin{vmatrix} 1 & 1 \\ 0 & 3 \end{vmatrix} = 3 \quad ; \quad C_{32} = -\begin{vmatrix} 1 & 1 \\ 10 & -3 \end{vmatrix} = 13$$

$$C_{13} = \begin{vmatrix} 10 & 0 \\ 0 & 2 \end{vmatrix} = 20 \quad ; \quad C_{23} = -\begin{vmatrix} 1 & -1 \\ 0 & 2 \end{vmatrix} = -2 ; \quad C_{33} = \begin{vmatrix} 1 & -1 \\ 10 & 0 \end{vmatrix} = 10$$

$$\Rightarrow A^{-1} = \frac{1}{56} \cdot \begin{bmatrix} 6 & 5 & 3 \\ -30 & 3 & 13 \\ 20 & -2 & 10 \end{bmatrix} = \begin{bmatrix} \frac{3}{28} & \frac{5}{56} & \frac{3}{56} \\ -\frac{15}{28} & \frac{3}{56} & \frac{13}{56} \\ \frac{5}{14} & -\frac{1}{28} & \frac{5}{28} \end{bmatrix}$$

$$x = A^{-1} b = \begin{bmatrix} \frac{3}{28} & \frac{5}{56} & \frac{3}{56} \\ -\frac{15}{28} & \frac{3}{56} & \frac{13}{56} \\ \frac{5}{14} & -\frac{1}{28} & \frac{5}{28} \end{bmatrix} \begin{bmatrix} 0 \\ 102 \\ 54 \end{bmatrix} = \begin{bmatrix} 12 \\ 18 \\ 6 \end{bmatrix} \quad \begin{cases} I_1 = 12\,A \\ I_2 = 18\,A \\ I_3 = 6\,A \end{cases}$$

PROBLEM SET 7.8

Find the Inverse of Matrix

1. $\begin{bmatrix} 1.80 & -2.32 \\ -0.25 & 0.60 \end{bmatrix}$

2. $\begin{bmatrix} \cos 2\theta & \sin 2\theta \\ -\sin 2\theta & \cos 2\theta \end{bmatrix}$

3. $\begin{bmatrix} 0.3 & -0.1 & 0.5 \\ 2 & 6 & 4 \\ 5 & 0 & 9 \end{bmatrix}$

4. $\begin{bmatrix} 0 & 0 & 0.1 \\ 0 & -0.4 & 0 \\ 2.5 & 0 & 0 \end{bmatrix}$

5. $\begin{bmatrix} 1 & 0 & 0 \\ 2 & 1 & 0 \\ 5 & 4 & 1 \end{bmatrix}$

6. $\begin{bmatrix} -4 & 0 & 0 \\ 0 & 8 & 13 \\ 0 & 3 & 5 \end{bmatrix}$

7. $\begin{bmatrix} 0 & 1 & 0 \\ 1 & 0 & 0 \\ 0 & 0 & 1 \end{bmatrix}$

8. $\begin{bmatrix} 1 & 2 & 3 \\ 4 & 5 & 6 \\ 7 & 8 & 9 \end{bmatrix}$

9. $\begin{bmatrix} 0 & 8 & 0 \\ 0 & 0 & 4 \\ 2 & 0 & 0 \end{bmatrix}$

10. $\begin{bmatrix} \frac{2}{3} & \frac{1}{3} & \frac{2}{3} \\ -\frac{2}{3} & \frac{2}{3} & \frac{1}{3} \\ \frac{1}{3} & \frac{2}{3} & -\frac{2}{3} \end{bmatrix}$

Showing the details, calculate the following expressions or give reason why they are not defined, when

$$\mathbf{A} = \begin{bmatrix} 3 & 1 & -3 \\ 1 & 4 & 2 \\ -3 & 2 & 5 \end{bmatrix}, \quad \mathbf{B} = \begin{bmatrix} 0 & 4 & 1 \\ -4 & 0 & -2 \\ -1 & 2 & 0 \end{bmatrix},$$

$$\mathbf{u} = \begin{bmatrix} 2 \\ 0 \\ -5 \end{bmatrix}, \quad \mathbf{v} = \begin{bmatrix} 7 \\ -3 \\ 3 \end{bmatrix}$$

11. $\mathbf{AB}, \quad \mathbf{BA}$

12. $\mathbf{A}^T, \quad \mathbf{B}^T$

13. $\mathbf{Au}, \quad \mathbf{u}^T\mathbf{A}$

14. $\mathbf{u}^T\mathbf{v}, \quad \mathbf{uv}^T$

15. $\mathbf{u}^T\mathbf{Au}, \quad \mathbf{v}^T\mathbf{Bv}$

16. $\mathbf{A}^{-1}, \quad \mathbf{B}^{-1}$

17. $\det \mathbf{A}, \quad \det \mathbf{A}^2, \quad (\det \mathbf{A})^2, \quad \det \mathbf{B}$

18. $(\mathbf{A}^2)^{-1}, \quad (\mathbf{A}^{-1})^2$

19. $\mathbf{AB} - \mathbf{BA}$

20. $(\mathbf{A} + \mathbf{A}^T)(\mathbf{B} - \mathbf{B}^T)$

Find the currents.

33.

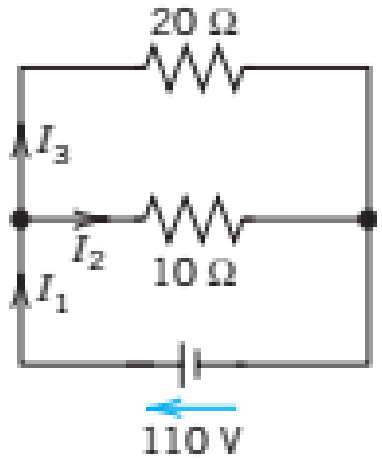

34.

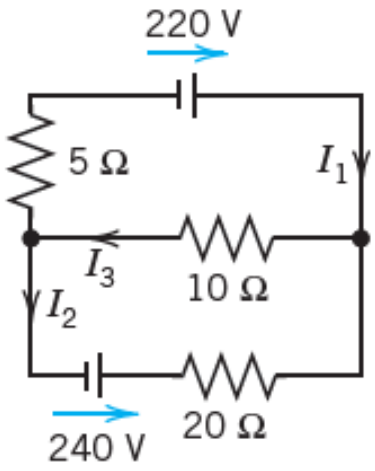

35.

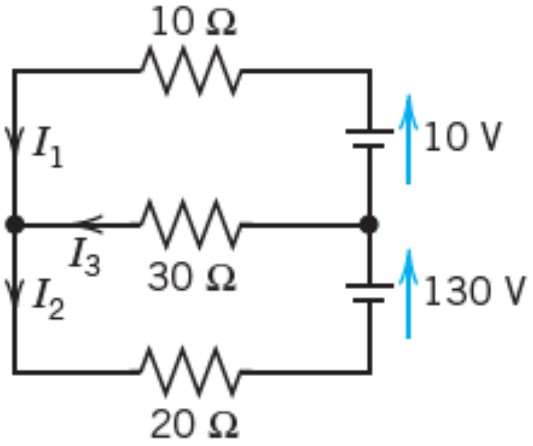

How to Find Eigenvalues and Eigenvectors

We formalize our observation. Let $\mathbf{A} = [a_{jk}]$ be a given nonzero square matrix of dimension $n \times n$. Consider the following vector equation:

$$\mathbf{Ax} = \lambda\mathbf{x}. \tag{1}$$

The problem of finding nonzero $\mathbf{x}$'s and λ's that satisfy equation (1) is called an eigenvalue problem.

Số λ được gọi là trị riêng của A, nếu tồn tại véctơ x khác không, sao cho $Ax = \lambda x$.

Khi đó, véctơ x được gọi là véctơ riêng của ma trận vuông A tương ứng với trị riêng λ.

Tìm trị riêng, véctơ riêng của ma trận vuông A cấp n.

Bước 1. Lập phương trình đặc trưng $\det(A - \lambda I) = 0$.

(Tính định thức ở vế trái, ta có phương trình bậc n theo λ)

Bước 2. Giải phương trình đặc trưng. Tất cả các nghiệm của phương trình đặc trưng là trị riêng của A và ngược lại.

Bước 3. Tìm VTR của A tương ứng TR λ_1 (chẳng hạn)

bằng cách giải hệ phương trình $(A - \lambda_1 I)X = 0$.

Tất cả các nghiệm khác không của hệ là các VTR của A ứng với trị riêng λ_1.

$$D(\lambda) = \det(\mathbf{A} - \lambda\mathbf{I}) = \begin{vmatrix} a_{11} - \lambda & a_{12} & \cdots & a_{1n} \\ a_{21} & a_{22} - \lambda & \cdots & a_{2n} \\ \cdot & \cdot & \cdots & \cdot \\ a_{n1} & a_{n2} & \cdots & a_{nn} - \lambda \end{vmatrix} = 0.$$

called the **characteristic equation** of **A**

EXAMPLE 1 **Determination of Eigenvalues and Eigenvectors**

We illustrate all the steps in terms of the matrix

$$\mathbf{A} = \begin{bmatrix} -5 & 2 \\ 2 & -2 \end{bmatrix}.$$

Solution. **(a)** ***Eigenvalues.*** These must be determined ***first***. Equation (1) is

$$\mathbf{Ax} = \begin{bmatrix} -5 & 2 \\ 2 & -2 \end{bmatrix}\begin{bmatrix} x_1 \\ x_2 \end{bmatrix} = \lambda\begin{bmatrix} x_1 \\ x_2 \end{bmatrix}; \qquad \text{in components,} \qquad \begin{aligned} -5x_1 + 2x_2 &= \lambda x_1 \\ 2x_1 - 2x_2 &= \lambda x_2. \end{aligned}$$

Transferring the terms on the right to the left, we get

$$(2^*)\qquad \begin{aligned} (-5-\lambda)x_1 + \quad 2x_2 \quad &= 0 \\ 2x_1 \quad + (-2-\lambda)x_2 &= 0. \end{aligned}$$

This can be written in matrix notation

$$(3^*)\qquad (\mathbf{A} - \lambda\mathbf{I})\mathbf{x} = \mathbf{0}$$

because (1) is $\mathbf{Ax} - \lambda\mathbf{x} = \mathbf{Ax} - \lambda\mathbf{Ix} = (\mathbf{A} - \lambda\mathbf{I})\mathbf{x} = \mathbf{0}$, which gives (3*). We see that this is a ***homogeneous*** linear system. By Cramer's theorem in Sec. 7.7 it has a nontrivial solution $\mathbf{x} \neq \mathbf{0}$ (an eigenvector of $\mathbf{A}$ we are looking for) if and only if its coefficient determinant is zero, that is,

$$(4^*)\qquad D(\lambda) = \det(\mathbf{A} - \lambda\mathbf{I}) = \begin{vmatrix} -5-\lambda & 2 \\ 2 & -2-\lambda \end{vmatrix} = (-5-\lambda)(-2-\lambda) - 4 = \lambda^2 + 7\lambda + 6 = 0.$$

We call $D(\lambda)$ the **characteristic determinant** or, if expanded, the **characteristic polynomial**, and $D(\lambda) = 0$ the **characteristic equation** of $\mathbf{A}$. The solutions of this quadratic equation are $\lambda_1 = -1$ and $\lambda_2 = -6$. These are the eigenvalues of $\mathbf{A}$.

(b$_1$) ***Eigenvector of*** **A** ***corresponding to*** λ_1. This vector is obtained from (2*) with $\lambda = \lambda_1 = -1$, that is,

$$\begin{aligned} -4x_1 + 2x_2 &= 0 \\ 2x_1 - \quad x_2 &= 0. \end{aligned}$$

A solution is $x_2 = 2x_1$, as we see from either of the two equations, so that we need only one of them. This determines an eigenvector corresponding to $\lambda_1 = -1$ up to a scalar multiple. If we choose $x_1 = 1$, we obtain the eigenvector

$$\mathbf{x}_1 = \begin{bmatrix} 1 \\ 2 \end{bmatrix}, \qquad \text{Check:} \qquad \mathbf{A}\mathbf{x}_1 = \begin{bmatrix} -5 & 2 \\ 2 & -2 \end{bmatrix}\begin{bmatrix} 1 \\ 2 \end{bmatrix} = \begin{bmatrix} -1 \\ -2 \end{bmatrix} = (-1)\mathbf{x}_1 = \lambda_1\mathbf{x}_1.$$

($\mathbf{b}_2$) ***Eigenvector of* A *corresponding to*** λ_2. For $\lambda = \lambda_2 = -6$, equation (2*) becomes

$$x_1 + 2x_2 = 0$$

$$2x_1 + 4x_2 = 0.$$

A solution is $x_2 = -x_1/2$ with arbitrary x_1. If we choose $x_1 = 2$, we get $x_2 = -1$. Thus an eigenvector of $\mathbf{A}$ corresponding to $\lambda_2 = -6$ is

$$\mathbf{x}_2 = \begin{bmatrix} 2 \\ -1 \end{bmatrix}, \qquad \text{Check:} \qquad \mathbf{A}\mathbf{x}_2 = \begin{bmatrix} -5 & 2 \\ 2 & -2 \end{bmatrix}\begin{bmatrix} 2 \\ -1 \end{bmatrix} = \begin{bmatrix} -12 \\ 6 \end{bmatrix} = (-6)\mathbf{x}_2 = \lambda_2\mathbf{x}_2.$$

EXAMPLE

Find the eigenvalues and eigenvectors of the matrix $\mathbf{A} = \begin{bmatrix} -4.0 & 4.0 \\ -1.6 & 1.2 \end{bmatrix}$

Solution. The characteristic equation is the quadratic equation

$$\det|\mathbf{A} - \lambda\mathbf{I}| = \begin{vmatrix} -4-\lambda & 4 \\ -1.6 & 1.2-\lambda \end{vmatrix} = \lambda^2 + 2.8\lambda + 1.6 = 0.$$

It has the solutions $\lambda_1 = -2$ and $\lambda_2 = -0.8$. These are the eigenvalues of $\mathbf{A}$.

For $\lambda = \lambda_1 = -2$ we have

$$\begin{aligned} (-4.0 + 2.0)x_1 + \quad 4.0x_2 \quad &= 0 \\ -1.6x_1 \quad + (1.2 + 2.0)x_2 &= 0. \end{aligned}$$

eigenvector of $\mathbf{A}$ corresponding to $\lambda_1 = -2.0$ is $\mathbf{x}^{(1)} = \begin{bmatrix} 2 \\ 1 \end{bmatrix}$.

Similarly, $\lambda_2 = -0.8$, $\mathbf{x}^{(2)} = \begin{bmatrix} 1 \\ 0.8 \end{bmatrix}$

PROBLEM SET 8.1

Find the eigenvalues. Find the corresponding eigenvectors.

1. $\begin{bmatrix} 3.0 & 0 \\ 0 & -0.6 \end{bmatrix}$

2. $\begin{bmatrix} 0 & 0 \\ 0 & 0 \end{bmatrix}$

3. $\begin{bmatrix} 5 & -2 \\ 9 & -6 \end{bmatrix}$

4. $\begin{bmatrix} 1 & 2 \\ 2 & 4 \end{bmatrix}$

5. $\begin{bmatrix} 0 & 3 \\ -3 & 0 \end{bmatrix}$

6. $\begin{bmatrix} 1 & 2 \\ 0 & 3 \end{bmatrix}$

7. $\begin{bmatrix} 0 & 1 \\ 0 & 0 \end{bmatrix}$

8. $\begin{bmatrix} a & b \\ -b & a \end{bmatrix}$

9. $\begin{bmatrix} 0.8 & -0.6 \\ 0.6 & 0.8 \end{bmatrix}$

10. $\begin{bmatrix} \cos\theta & -\sin\theta \\ \sin\theta & \cos\theta \end{bmatrix}$